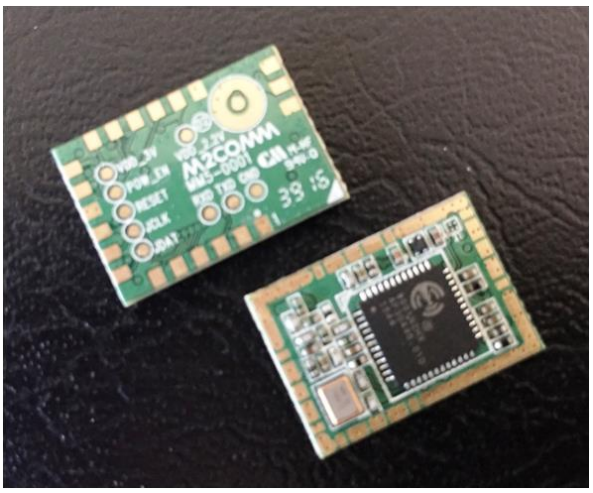

BSM8001-01

Datasheet

Elite Semiconductor Memory Technology Inc.

Important Notice

All rights reserved. No part of this document may be reproduced or duplicated in any form or by any mean without the prior permission of ESMT. The contents contained in this document are believed to be accurate at the time of publication. ESMT assumes no responsibility for any error in this document, and reserves the right to change the products or specification in this document without notice. The information contained herein is presented only as a guide or examples for the application of our products. No responsibility is assumed by ESMT for any infringement of patents, copyrights, or other intellectual property rights of third parties which may result from its use. No license, either express, implied or otherwise, is granted under any patents, copyrights or other intellectual property rights of ESMT or others. Any semiconductor devices may have inherently a certain rate of failure. To minimize risks associated with customer's application, adequate design and operating safeguards against injury, damage, or loss from such failure, should be provided by the customer when making application designs. ESMT's products are not authorized for use in critical applications such as, but not limited to, life support devices or system, where failure or abnormal operation may directly affect human lives or cause physical injury or property damage. If products described here are to be used for such kinds of application, purchaser must do its own quality assurance testing appropriate to such applications.

Trademarks

ESMT and the ESMT logo are trademarks or registered trademarks of ESMT. All other company or product names mentioned herein are trademarks or registered trademarks of their respective companies.

Contact Information

Elite Semiconductor Memory Technology Inc.

No.23, Industry E Rd. IV Science-Based Industrial Park, Hsinchu 300, Taiwan, R.O.C.

TEL: +886-3-5781970

FAX: +886-3-5644432

Revision Control

Ver.	Date	Description of Change	Approved
1.0	23/8/2018	Document First version	Charles Lee

Europe – EU Declaration of conformity

This device has been tested for compliance with the essential requirements of the RTTE directive 1999/5/EC. The following test methods have been applied in order to prove presumption of conformity with the essential requirements of the RTTE directive 1999/5/EC:

ETSI-EN 300 220-1 V2.1.1 : 2006 Electromagnetic compatibility and Radio spectrum Matters (ERM); Short Range Devices (SRD); Radio equipment to be used in the 25 MHz to 1 000 MHz frequency range with power levels ranging up to 500 mW; Part 1: Technical characteristics and test methods

ETSI-EN 300 220-2 V2.1.2 : 2007 Electromagnetic compatibility and Radio spectrum Matters (ERM); Short Range Devices (SRD); Radio equipment to be used in the 25 MHz to 1 000 MHz frequency range with power levels ranging up to 500 mW; Part 2: Harmonized EN covering essential requirements under article 3.2 of the R&TTE Directive

Table of Contents

1 Product Overview 8

2 Product Features 8

3 Functional Block 9

4 Pin Assignment and Package Mechanicals 10

5 Electrical Specifications 12

6 Preloaded Software 15

6.1 Sigfox Verified AT command 15

6.2 Special Notes for Sigfox AT Command Interface 17

6.3 Bootloader 18

6.4 Device ID, KEY and Portable Access Code 18

7 Application Information 19

7.1 Recommended Connection to Essential Pins 19

7.2 Switch ON and OFF Procedure 20

7.3 RF Power and Current Measurement. 20

8 Certification 21

9 Order Information 21

List of Figures

Figure 3-1 Module Block Diagram 9
Figure 4-1 Bottom View of Module 10
Figure 4-2 Module Pinout 11
Figure 7-1 Typical Application Circuit 19
Figure 7-2 Average Current Consumption vs. Power Output Setting (867MHz) 20
Figure 7-3 Measured Power vs. Power Output Setting (867MHz) 20

List of Tables

Table 5-1 Absolute Maximum Ratings 12
Table 5-2 Recommended Operating Conditions 12
Table 5-3 DC Current Characteristics 12
Table 5-4 Transmitter RF Performance 12
Table 5-5 Synthesizer Specification 13
Table 5-6 32kHz RC Oscillator Specification 13
Table 5-7 24MHz Crystal Oscillator Specification 14
Table 5-8 Pin IO Voltage 14
Table 6-1 AT Command Set 17
Table 7-1 Recommended Pin Connections 19

1 *Product Overview*

The BSM8001-01 is a Sigfox Verified modem module for the low power wide area network (LPWAN) market. It is designed with ESMT 's Uplynx XS8001 SOC. The module was designed for high performance, high quality, small form factor and a low cost. The design is fully compliant to ETSI regulations. The Sigfox application is ported over the Uplynx XS8001 and executed at high efficiency using its internal 32bit core processor. Every module is preloaded with Sigfox application software and module specific ID/KEY/PAC as specified by the Sigfox network system. The preloaded software also includes a bootloader which allows software updates or future user application development.

2 *Product Features*

- Sigfox Verified™ RF modem (reference design fully certified)
- Frequency range: ISM 868MHz
- Maximum output power: 18dBm
- Current consumption: 60mA at 14dBm
- Operating Voltage: 2.5V to 5.5V
- Operating Temperature: -40°C to 80°C
- Module enabling pin (POW_EN)
- 0.05µA OFF current
- LGA 21 19mm x 13.5mm (including RF output) Land Grid Array

3 *Functional Block*

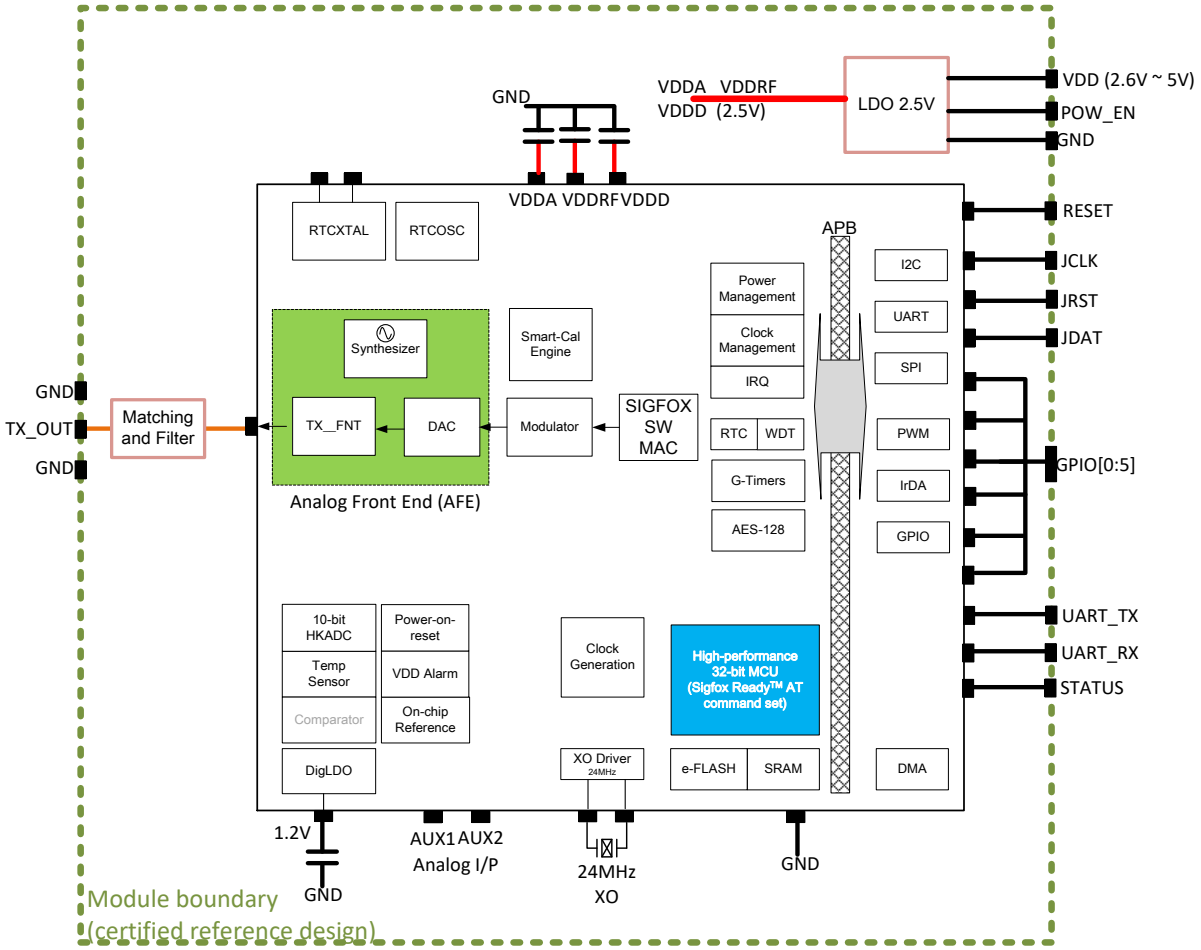

Figure 3-1 Module Block Diagram

The core of the BSM8001-01 module is the Uplynx XS8001 SOC. The module design is based on the XS8001 Sigfox Verified™ reference design. The BSM8001-01 has 6 sets of analogue/digital multi-function pins and digital only multi-function pins. Each multi-function pin can be configured by the user.

The BSM8001-01 communicates with the host MCU over a UART interface. The preloaded UART interface firmware is configured at 9600bps baud rate, 8-bit data, no parity bit, 1 stop bit and no flow control.

The STATUS pin indicates the activity of the Sigfox AT command interface. The module is switched ON and OFF with the POW_EN pin. In OFF mode, the module current consumption can be cut to its minimum (0.05µA) for longer battery operating time, an essential requirement for Sigfox where modem activity is very low.

The RF output is a 50Ω match pad with two adjacent ground pads.

4 *Pin Assignment and Package Mechanicals*

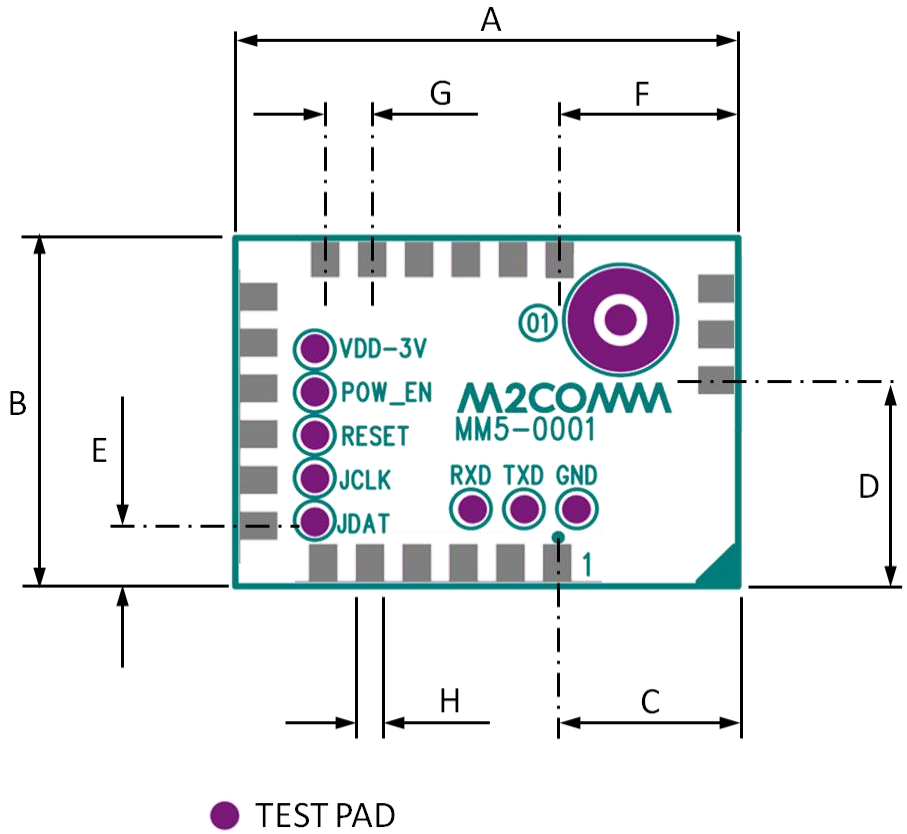

Dimension	A	B	C	D	E	F	G	H
mm	19.0	13.5	6.8	8.4	3.2	6.8	1.8 TYP.	1.0 TYP.
Pad Length: 1.68 TYP.								
Maximum thickness: 2.0								

Figure 4-1 Bottom View of Module

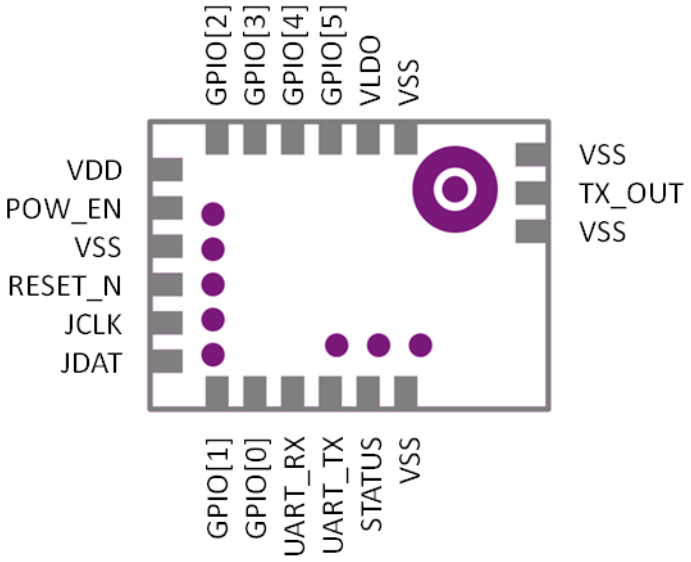

Pad Name	IO	Description
VDD	VDD	Power
VSS	GND	GND
VLDO	O	Operating voltage monitor point
RESET_N	I	Reset: When asserted LOW sets module to INITIAL state
POW_EN	I	Enable: Logic low for Disable; Logic high for enable
UART_TX	O	UART Tx data (9600bps)
UART_RX	I	UART Rx data (9600bps)
TX_OUT	O	50Ω antenna output
GPIO [0:5]	IO	Reserved
STATUS	O	Logic High: AT Command Interface ready Logic Low: Module busy (STATUS pin must NOT be pulled low by the application circuit during power ON or the module will automatically enter the firmware update mode)
JDAT	I	JTAG Interface
JCLK	I	JTAG Interface

Figure 4-2 Module Pinout

5 *Electrical Specifications*

Parameter	Min	Max	Unit
Power (VDD)	-0.3	5.5	V
Voltage on GPIO	-0.3	3.6	V
Storage Temperature	-40	140	°C
Maximum soldering temperature		250	°C

Table 5-1 Absolute Maximum Ratings

Parameter	Min	Max	Unit
VDD	2.5	5.5	V
Operating Temperature	-40	80	°C

Table 5-2 Recommended Operating Conditions

Parameter	Min	Typ.	Max	Unit
Off mode		0.05	1	µA
Sigfox Tx mode 868MHz 14dBm @3V		60		mA
Sigfox Tx mode 868MHz 17dBm @3V		75		mA

Table 5-3 DC Current Characteristics

Parameter	Min	Typ.	Max	Unit
Output power	14		18	dBm
Harmonics conducted 868MHz 14dBm output			ETSI-EN 300 220 Compatible	dBm
Output Power deviation vs Input voltage (2.6V ~5.5V)			1	dB

Table 5-4 Transmitter RF Performance

Parameter	Min	Typ.	Max	Unit
Reference Frequency		24		MHz
Frequency Range: High band	868		870	MHz
In-Band Phase Noise Floor		-89.77		dBc/Hz
Phase Noise @ 400kHz Offset from Carrier			-97	dBc/Hz
Phase Noise @ 500kHz Offset from Carrier			-101	dBc/Hz
Phase Noise @ 1MHz Offset from Carrier			-104	dBc/Hz
Phase Noise @ 2MHz Offset from Carrier			-107	dBc/Hz
Settling time from power on			100	µs
Lock Time			30	µs

Table 5-5 Synthesizer Specification

Parameter	Note	Min	Typ.	Max	Unit
Calibrated frequency	±5% course calibration		32.768		kHz
Frequency accuracy after calibration	With software offset adjustment routine			±1	%
Supply voltage coefficient	Frequency drift when supply voltage changes after calibration		+10		%/V
Initial calibration time			2.5		ms

Table 5-6 32kHz RC Oscillator Specification

Parameter	Condition/Note	Min	Typ.	Max	Unit
Crystal Frequency			24		MHz
Crystal Frequency accuracy requirement	This is the total tolerance including a) initial tolerance b) crystal loading c) aging d) temperature dependence The acceptable crystal tolerance depends on RF frequency and channel spacing / bandwidth		±20		ppm
Startup time				2	ms

Table 5-7 24MHz Crystal Oscillator Specification

Parameter	Min	Typ.	Max	Unit
Input Low Voltage	-0.3		0.8	V
Input High Voltage	2		3.6	V
Threshold point	1.36	1.45	1.55	V
Output High Voltage	2.4			V
Output Low Voltage			0.4	V
Schmitt Trigger Low to High Threshold Point	1.56	1.66	1.76	V
Schmitt Trigger High to Low Threshold Point	1.1	1.19	1.27	V
Input Leakage Current			±10	µA
Pull up resistor	42k	59k	88k	Ω
Pull down resistor	34k	54k	92k	Ω
Output current drive			20	mA

Table 5-8 Pin IO Voltage

6 *Preloaded Software*

The BSM8001-01 is loaded with the following software prior shipping:

1. Sigfox Verified™ Application
2. Bootloader
3. Device ID, KEY and Portable Access Code (PAC)

More detailed information can be found in document "ESUG-UPLYNX-001 Uplynx AT Command GUI and EasyAT Users Manual"

6.1 *Sigfox Verified AT command*

The BSM8001-01 is designed to be compliant with the Sigfox uplink specification. The Sigfox Verified™ AT command set is a standard deliverable and is used to access the network. For API interface request, please contact our sales representatives.

The BSM8001-01 communicates with the host MCU over a UART interface. The UART interface is configured at 9600bps baud rate, 8-bit data, no parity bit, 1 stop bit and no flow control. When the AT command interface is running at startup, the pin STATUS will be pulled high.

The following AT commands are supported.

Command	Description	Value
AT$302=pwr	Set Tx power	Pwr = Tx power [14 to 22]
AT$302?	Get current TX power	Return Current transmission power setting
AT$400=v1,v2,v3,v4	Set Sigfox configuration word for RCZ2 and RCZ4 settings	v1 = config_words_0 v2 = config_words_1 v3 = config_words_2 v4 = default FCC Channel
AT$400?	Inquire the Sigfox configuration words	
AT$410=mode	Enable Public Key for emulator mode	Mode: 0-normal mode; 1- Public key enabled (emulator mode)
AT$SB=bitvalue	Send a bit value of 0 or 1	Bitvalue = 0/1
AT$SF=frame	Send payload data, 1 to 12 bytes	Frame: data bytes (0,1,2,3…C,D,E,F) to be sent, 12 byte maximum
AT$RC	SIGFOX_API_reset	
AT$ID?	Get device ID	return ID
AT$PAC?	Get device PAC	return PAC
AT$IF=freq	Set transmission frequency in Hz	e.g. 868000000
AT$IF?	Inquire current frequency setting	Return frequency in Hz

Command	Description	Value
AT$CW= freq, mode	Test mode with continuous wave emission	Freq: 868000000 mode: 0-disable; 1-enable
AT$CM= packetlength	Test mode with random data packet at fixed frequency	Packetlength = number of bytes to be transmitted (1~26)
AT$V?	Read firmware information	
AT$O=mode, standard	Open Sigfox API library	Mode: 1 to load Sigfox library Standard: 1-RCZ1; 2-RCZ2; 4-RCZ4
AT$RCZ=standard	Sigfox library regional setting	Standard: 1-RCZ1; 2-RCZ2; 4-RCZ4
AT$RCZ?	Inquire Sigfox library regional setting	Standard: 1-RCZ1; 2-RCZ2; 4-RCZ4
AT$O?	Inquire Sigfox API library open or not	Mode: 1 to load Sigfox library standard: 0(EU)/1(US)
AT$OOB?	Get operation condition	Return values: [Battery voltage before active transmission in mV] [Battery voltage during active transmission in mV] [10x silicon temperature] e.g. 2650 [battery voltage 2.65V before transmission] 2550 [battery voltage 2.55V during transmission] 270 [27C silicon temperature]
AT$FW=mode	Firmware update mode	0: normal mode 1: update firmware with UART at 115200 After asserting the command, the device needs to be rebooted into XMODEM mode with UART speed of 115200bps. New binary can be loaded via XMODEM protocol over UART.
AT$GPIODIR=gpio, val	Set GPIO pin direction.	gpio = 1-GPIO0; 2-GPIO1; … , 6-GPIO5 val: 0-input (weak pull high); 1-output (input float)
AT$GPI=gpio	Return GPIO value	gpio = 1-GPIO0; 2-GPIO1; … , 6-GPIO5
AT$GPO=gpio, val	Set GPIO output high or output low	gpio = 1-GPIO0; 2-GPIO1; … , 6-GPIO5 val: 0(output low)/1(output high)
AT$FEAT=page	Erase flash page	Page: 0 ~ 13 [EasyAT Commander related]

Command	Description	Value
AT$SIO=port	Scan GPIO input values and execute relevant flash page	Port: 6-bit input for GPIO0 to GPIO5. A “1” represents the relevant GPIO input will be scanned. [EasyAT Commander related] e.g. port = “100000”, GPIO0 value is scanned and either GPIO0_Input(High) or GPIO0_input(Low) flash page will be executed [EasyAT Commander related]
AT$IFVTH=voltage	Set battery detection voltage threshold	Voltage supply is measured and the AT command on page 12 or page 13 will be executed if the voltage is lower and higher than the threshold respectively [EasyAT Commander related]
AT$DLY=count	No operation delay	Count: number of 100ms delays
AT$RFENA	Turns off the internal ADC after AT$OOB? and AT$IFVTH are used to minimize system current consumption	Value: 0 – Disable internal ADC
AT$SAVE	Saves all settings to flash, values will be retained after power off	

Table 6-1 AT Command Set

6.2 *Special Notes for Sigfox AT Command Interface*

- To load the Sigfox library for specific region X, one should set (AT$RCZ) and confirm (AT$RCZ?) the value stored for RCZ then execute AT$O=1,X
- The configuration set by the following AT commands will be stored on flash and the value will be retained even after power off
    - Transmitting frequency (i.e. AT$IF)
    - Transmitting power (i.e. AT$302)
    - Sigfox configuration word (i.e. AT$400)
    - Set RCZ region by AT$RCZ

6.3 *Bootloader*

I. The preloaded bootloader allows the user to reprogram the flash in the SOC. To enter the firmware update mode, user can;
Pull pin 16 low at startup (i.e STATUS pin of module)
On start up, the bootloader polls the module "STATUS" pin which is the pin 16 of the SOC. If the pin is logically low, the UART on the SOC is configured as 115200bps and the bootloader is waiting for firmware via XMODEM. User can then upload the application binary file to the SOC via XMODEM. Details can be found in "RM-UPLYNX-E001: Uplynx AT Command GUI and EasyAT User Guide". The application will be stored at the application startup address and be loaded up after the system is rebooted. Details can be found in the "Uplynx Software Development Kit User Guide". Since the "STATUS" pin is an output pin at normal operation, it is important to ensure the pin is NOT pulled down by the application circuit during normal startup.

II. Enter AT$FW=1 when the Sigfox verified AT command interface is uploaded, the module enters XMODEM mode after the AT$FW command is asserted. The speed of UART is configurable to 115200bps. The new firmware is to be transmitted via XMODEM protocol over UART and will be installed automatically. Upon successful update, the new firmware will be loaded on the next reboot. Details can be found in "ESUG-UPLYNX-001 Uplynx AT Command GUI and EasyAT Users Manual"

6.4 *Device ID, KEY and Portable Access Code*

As part of the Sigfox operation requirements, each Sigfox device must be assigned a unique identification number (ID), encryption key (KEY) and portable access code (PAC). This information is preloaded in the module and only the ID and PAC can be read via AT command.

7 *Application Information*

7.1 *Recommended Connection to Essential Pins*

PIN	Recommendation
TX_OUT	The 50Ω RF output should connect to a pi/T antenna matching circuit for potential antenna tuning. An ESD diode could be put at the antenna port to protect the product against ESD event induced due to human activity.
VSS	The RF performance relies strongly on a good quality ground. It is recommended to use ground plane if possible or thick and close ground trace is required to minimize radiation and ensure best RF performance
STATUS	Can be connected to the host processor to detect module status or the pin can lead to a status LED for displaying purposes (This pin must not be pulled down during power up or the unit will enter firmware update mode)
VDD	The voltage supply can be directly from a cell or ac adapter or USB. A decoupling capacitor of size 10uF would be recommended in place close to the 5V input. The allowable voltage at this power input is below 5.5V and above 2.6V.
POW_EN	It is connected to a host processor to switch on and off the modem module.
RST_N	This can be tied to a universal reset pin or the host processor. It is internally pulled high to VLDO. In other words, RST_N only works when POW_EN is set high. A 10uF capacitor would be recommended in place close to the module pin in case the supply voltage to the module. The pull high resistance onto pin RESET_N from the system must be smaller than 50kohm to ensure proper module startup.
VLDO	This is the output of the internal LDO of the module. This voltage supply is used by the module RF system and it is highly recommended to leave this pin unconnected. In case this supply is used by other part of system, a 1uF is recommended to be put close to the module.

Table 7-1 Recommended Pin Connections

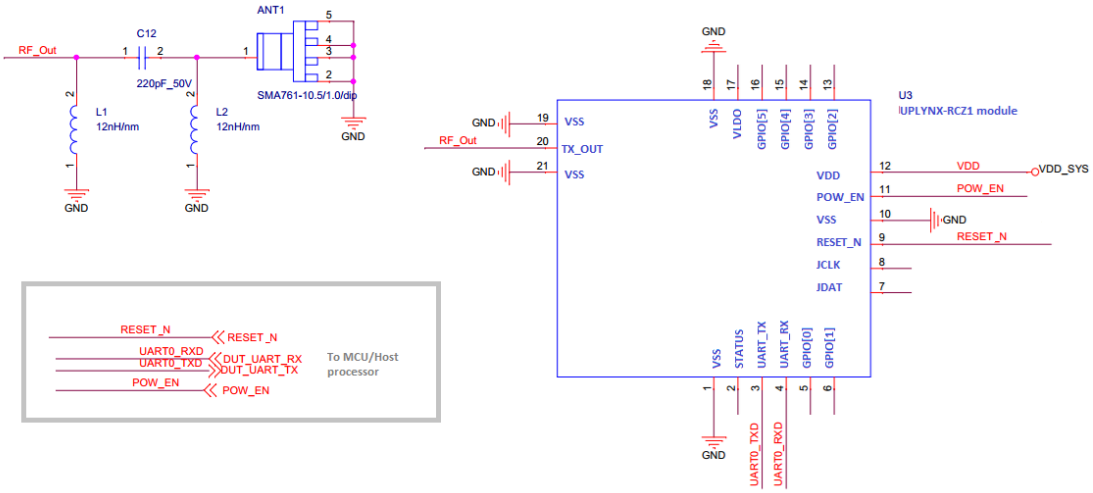

Figure 7-1 Typical Application Circuit

7.2 *Switch ON and OFF Procedure*

To ensure proper operation, POW_EN must be asserted high after 5V has settled then wait for 5ms before AT commands can be passed down the UART interface. The settling time is required for the LDO and crystal oscillator to settle to their operating conditions. A software routine can be used to poll the status of STATUS pin before any actual payload is passed to the module.

After switching the module OFF, by pulling POW_EN low, it is highly recommended that the system should wait for at least 10ms before another attempt to power ON.

7.3 *RF Power and Current Measurement.*

The Uplynx XS8001 operates from 1.8V to 3.6V and the module is designed to leave enough headroom for battery voltage variation and also provide enough RF transmission power.

2.5V is selected on BSM8001-01. With AT$302, the module transmission power is configured within the range of 14 to 22.

The transmission power and current consumption are measured and are shown below. The user can select an appropriate power level setting to accommodate losses.

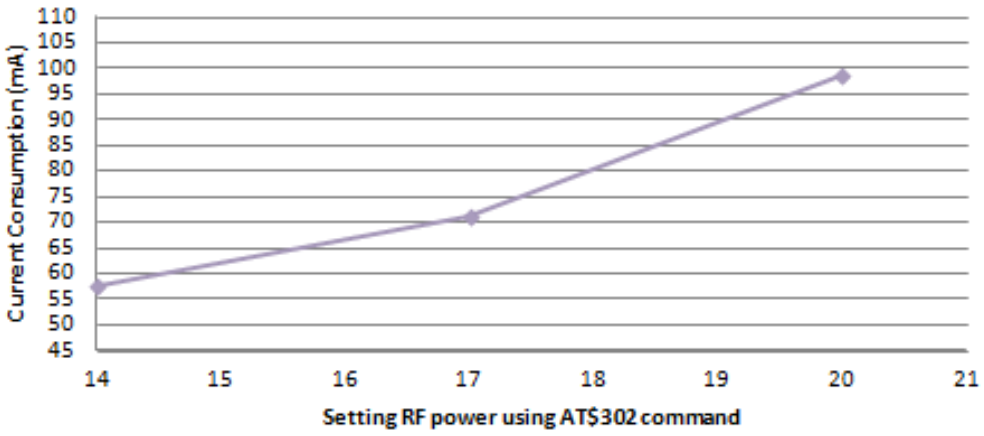

Figure 7-2 Average Current Consumption vs. Power Output Setting (867MHz)

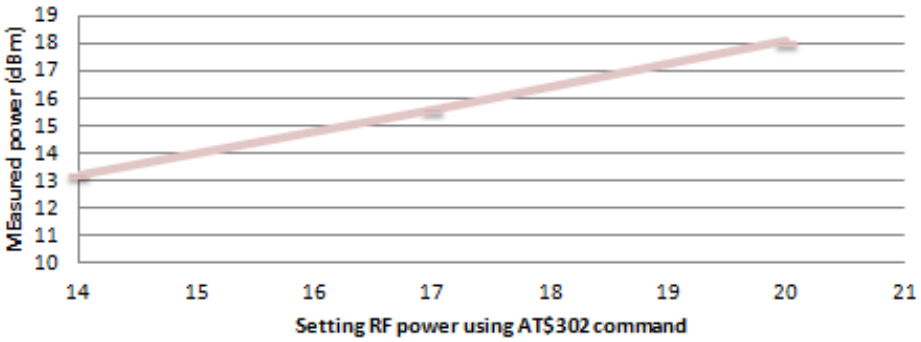

Figure 7-3 Measured Power vs. Power Output Setting (867MHz)

8 *Certification*

- Sigfox RCZ1 reference design certification
- ETSI EN 300 220

9 *Order Information*

Part Number	Description
BSM8001-01	Uplynx Sigfox Verified RCZ1 modem module 2.5V

*Please contact our sales representatives for detail information.

Related products

Part Number	Description
BSE8001-01	Uplynx Sigfox Verified RCZ1 modem Evaluation Kit